OPERATOR'S MANUAL

Feed Pusher

Model FP8X1.5, FP8X2, FPV8X1.5, FPV8X2
Serial Number 12914-
Manual# 96373 OCT 2021 ENGLISH

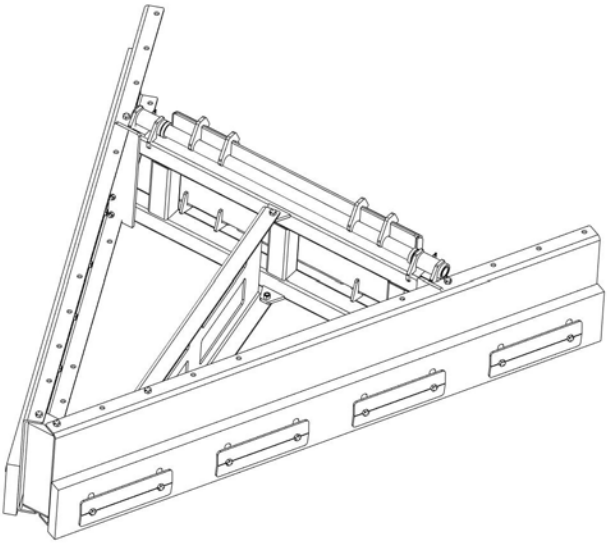

COPYRIGHT © 2021
MESSER REPAIR AND FABRICATING LLC
SAUK CENTRE, MN
PRINTED IN USA
ALL RIGHTS RESERVED

Introduction

Using This Manual

Your loader operator's manual contains instructions to safely operate the loader. Anyone who operates a loader with this attachment installed must first read, understand and follow the instructions in the loader operator's manual.

This manual contains instructions to safely operate and service the attachment. Anyone who operates or services the attachment must first read, understand and follow the instructions in this manual.

Additional operating or servicing information for the attachment may be provided online, in video, or in other publications. This additional information does not replace, and is not a substitute for reading and following, the instructions in this manual.

The safety alert symbol is shown in WARNING statements to alert users to hazards which could cause death or injury. Carefully read and follow the messages.

IMPORTANT notices alert users to instructions which, if not followed, could result in damage. Carefully read and follow the messages.

There may be times when the attachment and loader shown in this manual may not be your exact model. The model shown will be close enough to your attachment or loader to accurately convey the information.

The most current information available is included in this manual. The publisher may revise this manual at any time and is not required to notify users of revisions.

Replacement Manuals

Be sure to include this operator's manual if you sell or transfer ownership of the attachment.

Contact Messer Repair and Fabricating, LLC for a printed manual, or find a downloadable manual on our website.

Using This Attachment

The attachment is designed to move feed with a single blade or two (v) blades.

The attachment is designed for installation on a full-size loader.

The manufacturer reserves the right to make improvements, and to discontinue or change specifications, models or design without notice and

without incurring obligation.

Loader Compatibility

Confirm your loader's Rated Operating Capacity (ROC) in the loader operator's manual. Confirm your attachment's ROC in SPECIFICATIONS in this manual.

Do not install the attachment on the loader if the combined weight of the attachment and attachment load will exceed the loader ROC during operation because this may cause difficulty in controlling the loader or may cause loader damage.

Do not exceed the attachment's ROC because this may damage the attachment.

Attachment compatibility with your loader should be confirmed before the intitial purchase. If you receive the attachment as part of a later resale or transfer of ownership, contact the manufacturer to confirm the attachment is designed to be used with your loader before you install the attachment.

Product Misuse

Product misuse can cause accidents, injury and death.

The manufacturer of the attachment is not responsible for any harm or injury resulting from product misuse.

Product misuse includes operating or servicing the attachment without following the instructions in this manual and in the loader manuals, using the attachment in any way for which it was not designed, neglecting to confirm loader compatibility, and modifying the attachment.

Modifications

Do not modify the attachment in any way.

Manufacturer Contact

Call Messer Repair and Fabricating, LLC at (833) 352-3477, or see us at www.messerrepair.com.

Product Identification

Identification Numbers

Record your product information to provide when you contact the dealer or manufacturer.

Feed Pusher

Models FP8X1.5, FP8X2, FPV8X1.5, FPV8X2
Serial Number 12914-

Serial Number Location

Purchase Date	
Dealer	
Dealer Phone	
Model	
Serial #	

Specifications

Model	FP8X1.5
Angle Adjustment Range	18 - 97 degrees
L x W x H (60 deg. angle)	216 x 226 x 64 cm (85 x 89 x 25 in.)
Weight	293 kg (645 lb.)
Rated Operating Capacity	1361 kg (3,000 lb.)

Model	FP8X2
Angle Adjustment Range	18 - 97 degrees
L x W x H (60 deg. angle)	216 x 226 x 64 cm (85 x 89 x 25 in.)
Weight	322 kg (710 lb.)
Rated Operating Capacity	1361 kg (3,000 lb.)

Model	FPV8X1.5
Angle Adjustment Range	53 - 63 degrees
L x W x H (60 deg. angle)	213 x 274 x 64 cm (84 x 108 x 25 in.)
Weight	442 kg (975 lb.)
Rated Operating Capacity	1361 kg (3,000 lb.)

Model	FPV8X1.5
Angle Adjustment Range	53 - 63 degrees
L x W x H (60 deg. angle)	213 x 274 x 64 cm (84 x 108 x 25 in.)
Weight	481 kg (1,060 lb.)
Rated Operating Capacity	1361 kg (3,000 lb.)

Safety Decals

Decal Locations

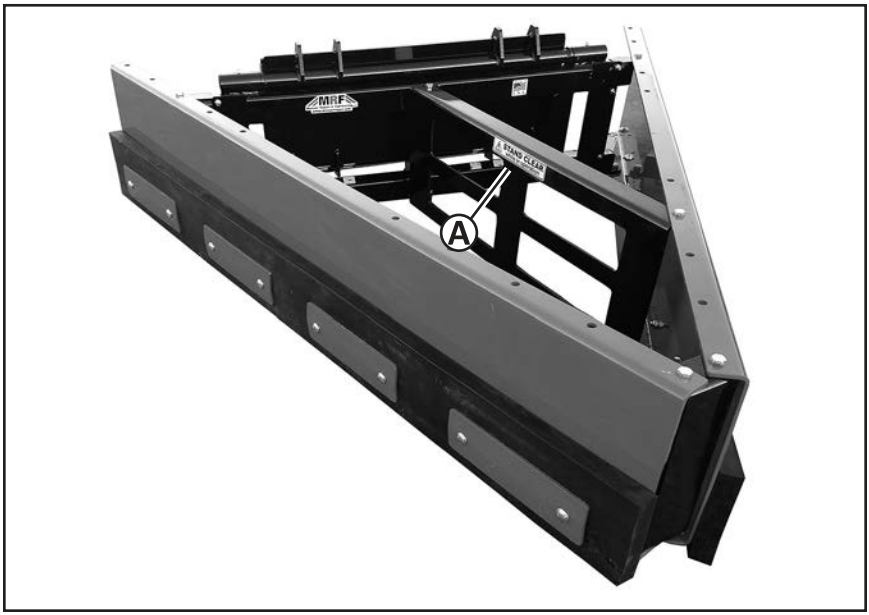

Location	Description	Part Number
A	Stand Clear Decal	96028

STAND CLEAR DECAL 96028

STAND CLEAR WHILE IN OPERATION

Wear Protective Equipment

- Wear gloves to protect hands from burns if hydraulic couplers become hot during operation.
- Never wear sandals or other light footwear when operating or servicing the attachment. Wear protective footwear when handling blades or heavy parts.
- Do not wear loose fitting clothing which may become entangled when operating or servicing the attachment.

Parking Safely

1. Follow the instructions in the loader operator's manual to park the loader safely.
2. Fully lower the attachment to level ground.
3. Stop the loader engine and remove the key from the switch.
4. Do not leave the loader operator seat until the engine and all other moving loader and attachment parts have stopped.
5. Follow the instructions in the loader operator's manual to exit the loader safely. Use the attachment step area if one is provided.

Operating Safely

- Always be aware of the weight of any loads you are transporting with an attachment. The weight of any load must not exceed the attachment's Rated Operating Capacity. The weight of the attachment combined with the attachment load must not exceed the loader's Rated Operating Capacity.
- Do not allow anyone to operate the attachment unless they have first read and understood the loader and the attachment operator's manuals.
- Do not allow anyone to operate the attachment unless they have first read and understood the safety and warning decals on the loader and on the attachment.
- The attachment owner is responsible for training others to safely operate the attachment, and is responsible for any injuries or harm which occurs while the attachment is being operated.
- If an area to step on the attachment has been provided, be sure to use it when entering and exiting the loader.

- Before operating, replace any worn or damaged safety decals.
- Before operating, thoroughly inspect the attachment to be sure all hardware (bolts, nuts, etc.) is installed and tightened.
- Before operating, thoroughly inspect the attachment to be sure it is in working order. If the attachment is damaged or otherwise not in working order, do not operate until it has been repaired by a qualified technician.
- Before raising or lowering the attachment be sure the area is clear of bystanders.
- Do not operate the loader or the attachment if you are under the influence of alcohol, drugs, or medications which may cause drowsiness.
- Do not allow children to operate the loader or the attachment.
- Do not allow anyone who has not been trained to operate the loader or the attachment.
- Never allow riders on the attachment.
- Keep hands, feet or other objects away from underneath the attachment while operating.
- Fully lower the attachment to level ground when you are done operating.
- Never leave the attachment unattended while in a raised position.
- When transporting the attachment installed on the loader, travel at a slower speed to maintain control.

Servicing Safely

- Remove the attachment from the loader before servicing when instructed to do so in this manual.
- Do not allow anyone to service the attachment unless they have first read and understood the loader and the attachment operator's or service manuals.
- Do not allow anyone to service the attachment unless they have first read and understood the safety and warning decals on the loader and on the attachment.
- The attachment owner is responsible for training others to safely service the attachment, and is responsible for any injuries or harm

which occurs while the attachment is being serviced.

- Before inspecting or servicing the attachment, follow the Parking Safely instructions in this manual.
- Always securely block the attachment to prevent accidental release of the lifting mechanism when inspecting or servicing the attachment.

Hydraulic Fluid Safety

- Read and understand the hydraulic safety information in the loader operator's manual before operating or servicing the attachment.
- Use cardboard or a board when you check for a leak.
- Fluid in hydraulic hoses is under extreme pressure. If fluid is injected into your skin seek medical treatment immediately.
- Do not handle any hydraulic components until pressure has been relieved from the system.
- Inspect attachment hydraulic hoses and hose shields for damage or wear before attaching to the loader.

Safety Decals

Safety decals may be installed on the attachment to warn users of safety hazards:

- DANGER decals provide warnings about hazardous situations which will result in death or serious injury if not avoided.
- WARNING decals provide warnings about hazardous situations which could result in death or seriousinjury if not avoided.
- CAUTION decals provide warnings about hazardous situations which could result in injury if not avoided.

Read and understand all safety decals before operating or servicing the attachment.

See the Safety Decal Location illustration in this manual to confirm where decals are installed on the attachment.

Safety decals which are missing, worn or faded must be replaced. Replacement safety decal part numbers are included in this manual. Contact the attachment manufacturer for replacement decals.

Installing the Attachment

1. Follow the instructions in the loader operator's manual to install the attachment and exit the operator station safely.
2. Fully lower the loader lift arms.

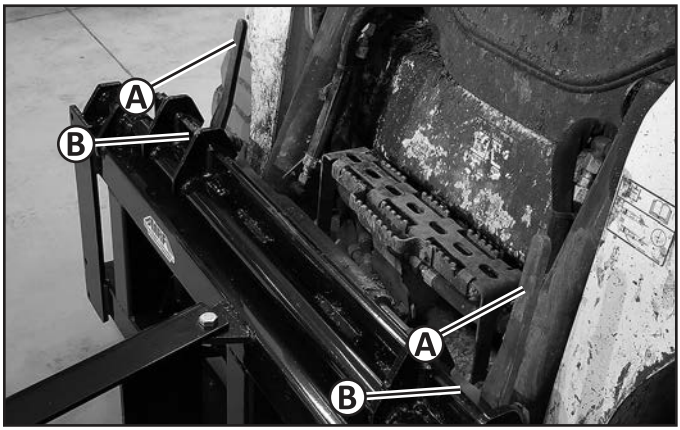

WARNING

AVOID INJURY!

Loader attaching plate levers which are operated manually may have spring tensioning. Firmly grasp the levers and move the levers slowly.

3. Move the loader attaching plate levers (A) to the unlocked (up) position either manually or by using the loader controls.

IMPORTANT

AVOID DAMAGE!

Attaching plate levers may be damaged if they strike the attachment. Be sure the attaching plate levers do not hit the attachment during installation.

4. Tilt the loader attaching plate forward, and drive the loader forward until the top edge of the loader attaching plate is under the top flange (B) of the attachment mounting frame.
5. Raise the loader lift arms slightly until the attaching plate is fully seated under the top flange.

6. Tilt the attaching plate backward to raise the front of the attachment.

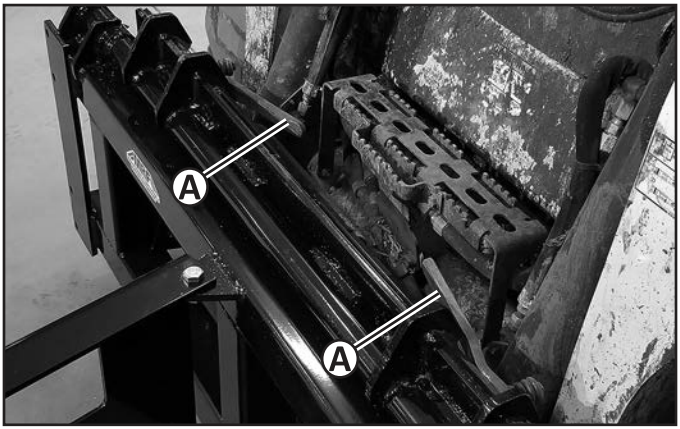

7. Move the loader attaching plate levers (A) to the locked (fully down) position either manually or by using the loader controls.
8. Park the loader. (See Parking Safely in this manual.)

IMPORTANT

AVOID DAMAGE!

The attachment may come off the loader if it is not secured to the attaching plate. The attaching plate pins or wedges must be extended into the attachment with the levers fully down.

Picture Note: Wedge on left side shown. Check the wedges or pins on both sides of the attachment.

9. Check to be sure the loader attaching plate pins or wedges (C) extended into the holes in the bottom of the attachment mounting

frame. If not, move the loader attaching plate levers to the unlocked (up) position and repeat installation.

Removing the Attachment

1. Follow the instructions in the loader operator's manual to remove the attachment and exit the operator station safely.
2. Fully lower the loader lift arms and the attachment to level ground.

WARNING

AVOID INJURY!

Loader attaching plate levers which are operated manually may have spring tensioning. Firmly grasp the levers and move the levers slowly.

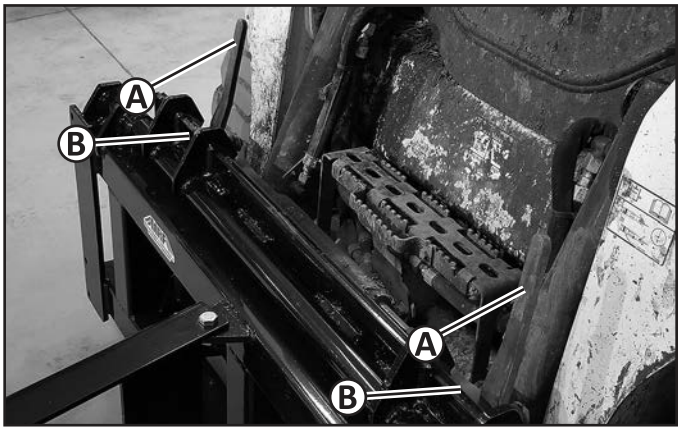

WARNING

AVOID INJURY!

Loader attaching plate levers which are operated manually may have spring tensioning. Firmly grasp the levers and move the levers slowly.

3. Move the loader attaching plate levers (A) to the unlocked (up) position as shown either manually or by using the loader controls.
4. Tilt the loader attaching plate forward slightly and drive the loader backward until the top edge of the attaching plate clears the top flange (B) of the attachment mounting frame.

Operating

Pre-Operation Inspection

Before starting operation, inspect the area you will be operating in and inspect the attachment.

Inspect the Work Area

1. Confirm the area is clear of bystanders including animals. Establish a safety zone by keeping bystanders and animals beyond a 100 foot radius around the attachment when operating.

Inspect the Attachment

1. Inspect the attachment to be sure it is in working order. If the attachment is damaged or not in working order, do not operate until it has been repaired by a qualified technician.

Description

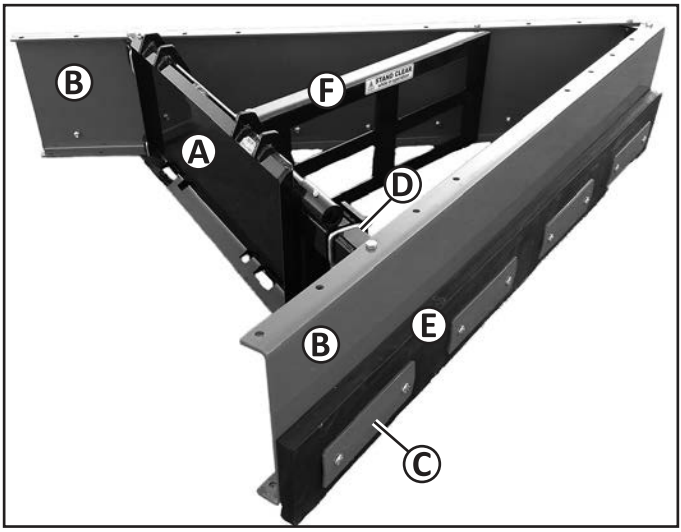

A - Main Frame

B - Blade Mount

C - Blade Mount Bolt Plate

D - Slide Weldment

E - Rubber Blade

F - Center Formed Arm

Theory of Operation

The Feed Pusher is attached to the loader and used to move feed when traveling in the forward direction. The angle of the blades can be adjusted. The quick tach allows the blades to float while operating.

Operation

1. Follow the instructions in the Installing and Removing section to install the attachment.
2. Park the loader or tractor. (See Parking Safely in this manual.)
3. Peform the pre-operation inspection.
4. Adjust the angle of the blades if desired.

Adjusting the Single Blade Angle Using the Slide Weldment

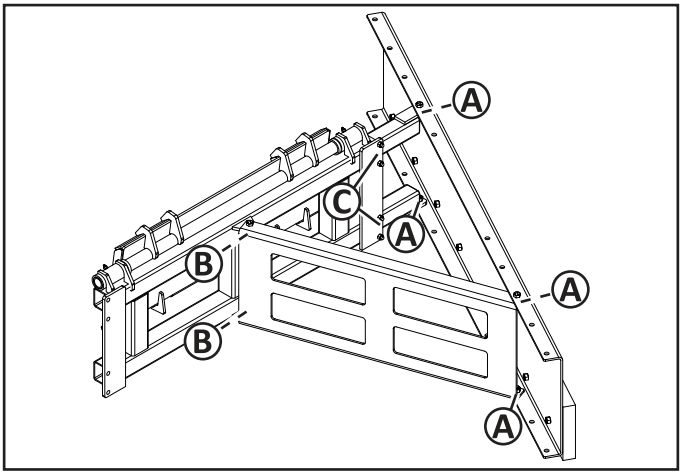

1. Loosen the four nuts (A) on the blade.
2. Loosen the two nuts (B) on the center formed arm.
3. Loosen the four u-bolt nuts (C) and move the slide weldment to adjust the blade angle.
4. Tighten all the nuts.

Adjusting the V-Blade Angle Using the Slide Weldments

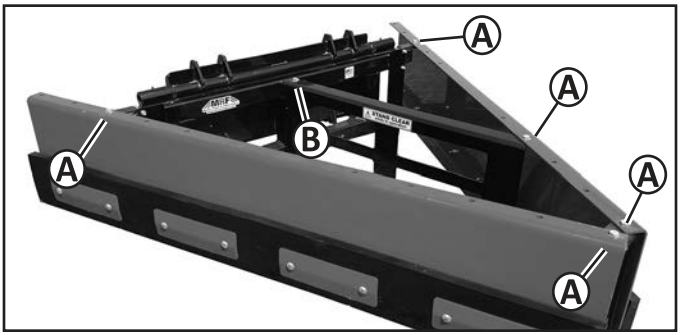

1. Loosen the five nuts and bolts (A) on the top and bottom of both blade mounts.
2. Loosen the two nuts and bolts (B) on the center formed arm.

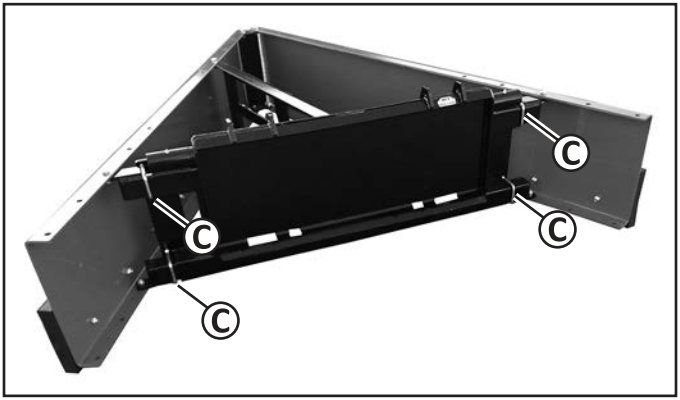

3. Loosen the eight nuts on the u-bolts (C) and move the slide weldments to adjust the angle of the blade mounts.
4. Tighten all the nuts.

Adjusting the Single Blade

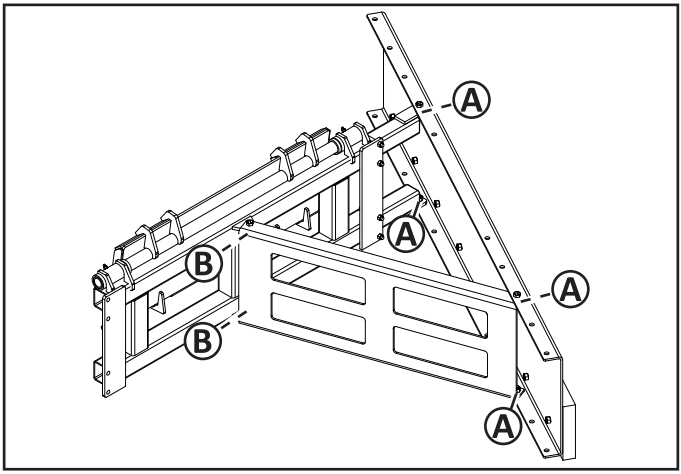

1. Remove the four nuts (A) and bolts from the blade mounts.
2. Loosen the two nuts (B) on the center formed arm.
3. Reposition the blade mount on the slide weldment and the center formed arm.

4. Install the four bolts and nuts.
5. Tighten all the nuts.

Adjusting the V-Blade

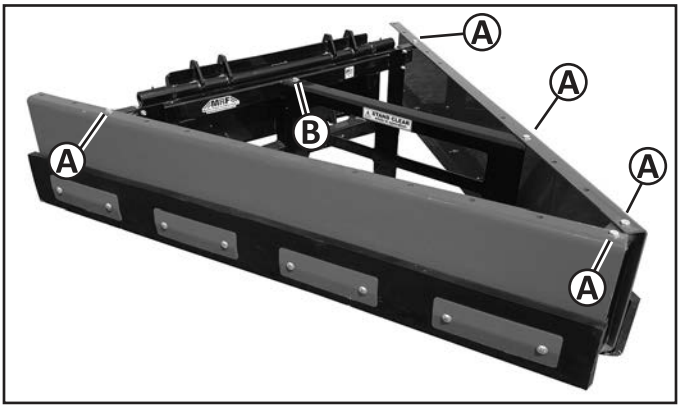

1. Remove the five nuts and bolts (A) from the top of both blade mounts and from the bottom of both blade mounts.
2. Loosen the two nuts and bolts (B) on the center formed arm.
3. Reposition the blade mounts on the slide weldments and the center formed arm.
4. Install the ten bolts and nuts on the blade mounts.
5. Tighten all the nuts.

Transporting the Attachment

On the Loader

Check to be sure the attachment is correctly installed on the loader before hauling the loader on a trailor or truck. Follow all loader, truck or trailer operator's manual instructions to safely haul the loader.

Hauling the Attachment

Follow all truck or trailer operator's manual instructions to securely fasten the attachment to the truck or trailer with straps or chains.

Servicing

Service Intervals

Every 8 hours or daily:

- Grease the quick tach.
- Check and tighten all hardware.

Monthly:

- Inspect rubber blades for wear. Adjust, rotate or replace as needed.

Lubrication

Recommended Grease

Standard Lithium

Lubricating the Quick Tach

1. Park the loader. (See Parking Safely in this manual.)

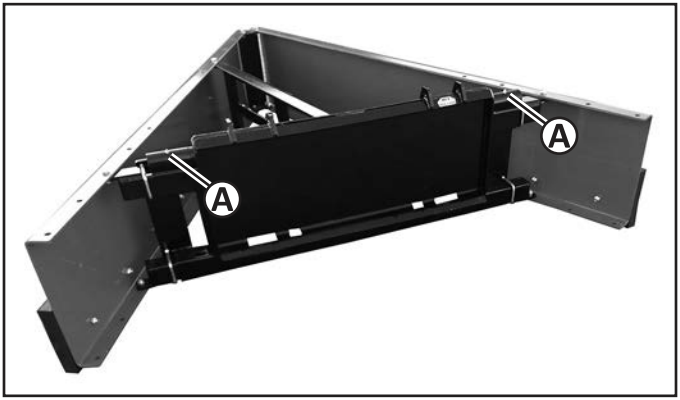

2. Lubricate the two grease fittings (A) on the quick tach until grease appears in the joints.

Adjusting the Rubber Blades

Note: Position the rubber blade so the edge is about 1-1/2 inches below the blade mount if your blade is 1-1/2 inches thick, 2 inches below the blade mount if your blade is 2 inches thick.

1. Park the loader. (See Parking Safely in this manual.)

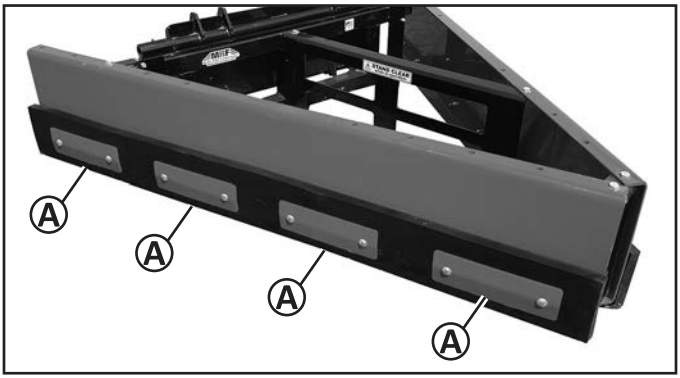

2. Loosen the nuts and bolts attaching the blade mount plates (A) and the rubber blade to the blade mount.
3. To adjust for wear move the rubber blade down until the edge is below the bottom of the blade mount a distanced equal to your blade thickness.
4. Tighten all the nuts.

Rotating or Replacing Rubber Blades

1. Park the loader. (See Parking Safely in this manual.)

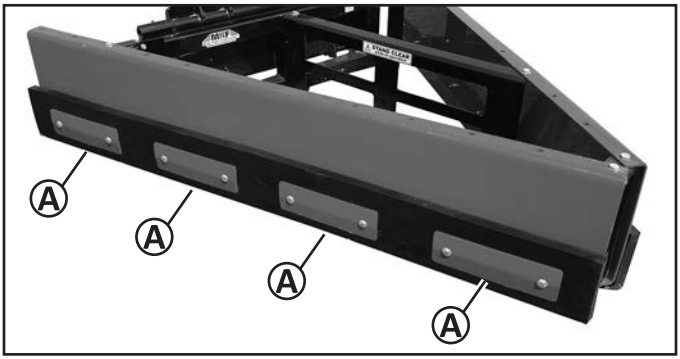

2. Remove the nuts and bolts attaching the blade mount plates (A) and the rubber blade to the blade mount.
3. Reverse or rotate or replace the rubber blade as needed.

Note: Position the rubber blade so the edge is about 1-1/2 inches below the blade mount if your blade is 1-1/2 inches thick, 2 inches below the blade mount if your blade is 2 inches thick.

4. Install the rubber blade and the blade mount plates with the bolts and nuts.

Troubleshooting

Problem	Action
The quick tach plate doesn't pivot.	Lubricate the quick tach.
Excessive rubber blade wear.	Confirm the quick tach is pivoting to float while operating. Reduce the amount of down pressure on the attachment while operating.
Material is not being moved or material is left behind.	Inspect the rubber blades for wear. Adjust, rotate or replace as needed.

Replacement Parts

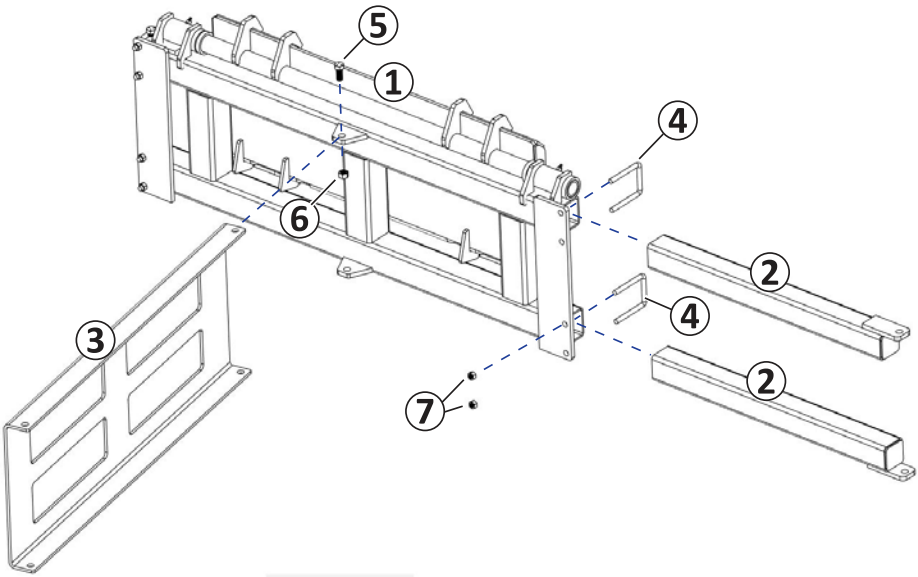

Replacement Parts

Item	Qty.	Part Number	Part Description
1	1	07022-P	Main Frame Weldment
2	4	07021-P	Slide Weldment
3	1	07515-P	FP Center Formed Arm
4	4	06692	U-Bolt (Qty. 2 for Single Blade)
5	8	-	Bolt, 5/8 - 11 x 1-1/2
6	8	-	Locknut, 1/2 - 13
7	1	-	Locknut, 5/8 - 11
8	2	07010-P	Formed Blade Mount
9	8	07011-P	Blade Mount Bolt Plate
10	2	FP2RUBBER	Rubber Edge, 2 x 10 x 96 in.
11	8	-	Bolt, 5/8 - 11 x 1-1/2
12	16	-	Bolt, Partial Thread, 5/8 - 11 x 3-1/2
13	14	-	Locknut, 5/8 - 11
14	1	07516-P	FPV Center Formed Arm

Replacement Parts

Contact Messer Repair and Fabricating, LLC for replacement parts. Part numbers may change without notice.

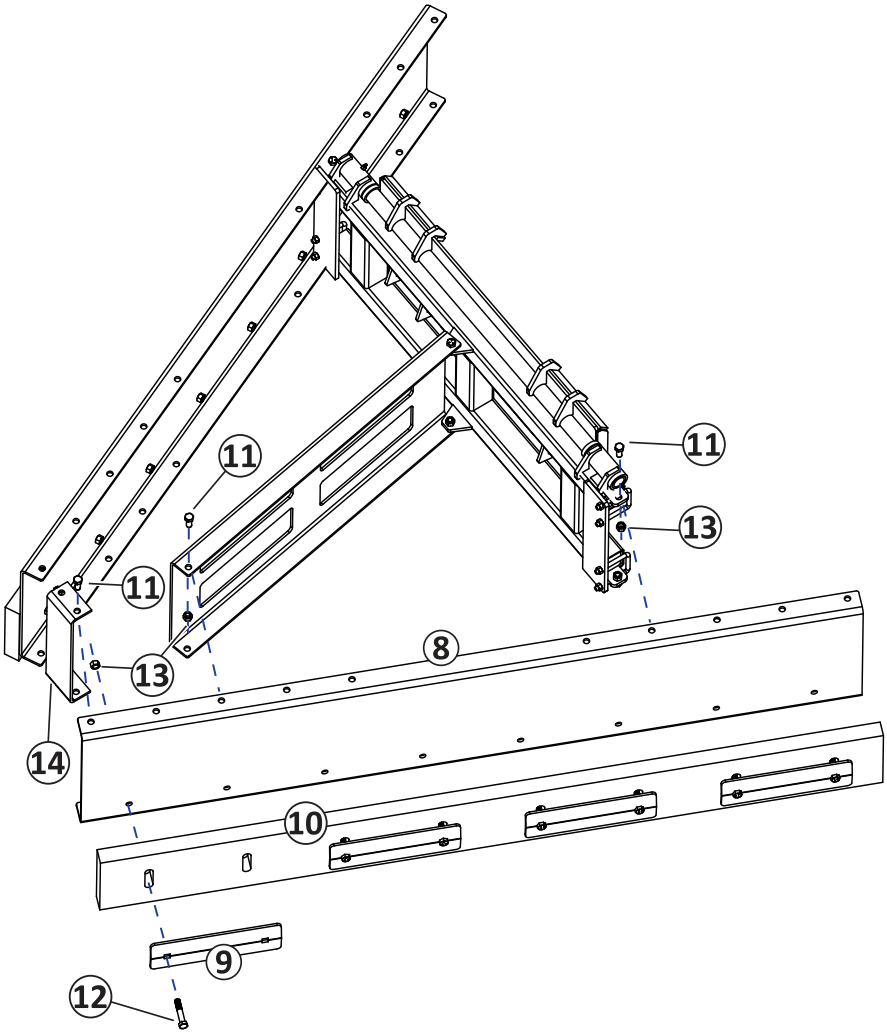

Warranty

MESSER REPAIR & FABRICATING, LLC

Limited Warranty and Terms and Conditions of Sale

The following limited warranty, and terms and conditions of sale (the "Limited Warranty") apply to all equipment, products, parts, and goods (any of the foregoing are referred to herein as "Equipment") sold by Messer Repair & Fabricating, LLC ("Messer"):

1. Covers All Equipment. Each purchase of Equipment by a purchaser is expressly made conditional on purchaser's assent to the terms and conditions in this Limited Warranty.

2. Limited Warranty. Messer warrants that for a period of 24 months from the date of purchase, the Equipment will remain free from defects in material and workmanship under normal use and proper maintenance. Messer's obligation under the warranty shall be limited to the repair or replacement (at Messer's option) of the Equipment. Notwithstanding the foregoing, if the Equipment is used for commercial purposes or is rented or leased out by the purchaser, then, the foregoing warranty shall only be for a period of 180 days and not 24 months.

3. No Warranty For Equipment Components From Third Parties. Notwithstanding the limited warranty terms set forth above, MESSER OFFERS NO WARRANTY WHATSOEVER WITH RESPECT TO ANY COMPONENTS OF THE EQUIPMENT MADE OR PROVIDED TO MESSER BY OTHER MANUFACTURERS, PRODUCERS, OR SELLERS (the "Purchased Components"). The sole and exclusive warranty for each the Purchased Components shall be limited to the express written warranty with respect to the Purchased Component as provided by the manufacturer, producer, or seller of such Purchased Component. Messer's responsibility and liability for the Purchased Components shall be limited to the assignment of the Purchased Components' express written warranties applicable to the Purchased Components. Purchased Components include, without limitation, the following: axles, tires and rims; trailer hitch components and jacks; hydraulic pumps, motors, cylinders and components; and bales spears, pallet tines, and bucket teeth.

4. No Other Warranties. THE FOREGOING REPAIR AND REPLACEMENT OBLIGATIONS IN SECTION 2 ARE IN LIEU OF ALL OTHER WARRANTIES, LIABILITIES AND OBLIGATIONS, INCLUDING ALL WARRANTIES OF MERCHANTABILITY, OF FITNESS FOR A PARTICULAR PURPOSE OR OTHERWISE, EXPRESSED OR IMPLIED IN FACT OR BY LAW, AND STATE MESSER'S ENTIRE AND EXCLUSIVE LIABILITY AND PURCHASER'S EXCLUSIVE REMEDY FOR ANY CLAIM IN CONNECTION WITH THE SALE AND PURCHASE OF EQUIPMENT (AND ALL COMPONENTS THEREOF), THEIR DESIGN, SUITABILITY FOR USE, INSTALLATION OR OPERATIONS.

Warranty

5. Location of Warranty Repairs. All warranty repairs pursuant to this Limited Warranty shall be made at Messer's corporate manufacturing plant, or other location as determined by Messer, at its discretion. Purchaser shall be responsible for and pay for any transportation expenses necessary for Limited Warranty repairs.

6. Limited Warranty Voidable. The limited warranty herein is void and deemed waived if the purchaser fails to give written notice to Messer of any alleged defect under the limited warranty herein within 20 days of its discovery; or (a) purchaser or parties other than Messer or its authorized representatives attempts to remedy or fix the alleged Equipment defects; or (b) purchaser has used the Equipment for purposes it was not intended to be used for; or (c) purchaser has not operated the Equipment in a manner consistent with Messer's instructions for the Equipment; or (d) the Equipment has been modified, altered, abused, or misused; or (e) the Equipment has been damaged pursuant to accident, fire, flood, or other Act of God.

7. No Consequential Damages. IN NO EVENT SHALL MESSER BE LIABLE FOR ANY DIRECT, INDIRECT, SPECIAL OR CONSEQUENTIAL DAMAGES WHATSOEVER, AND MESSER'S LIABILITY, UNDER NO CIRCUMSTANCES, WILL EXCEED THE PRICE PAID FOR THE EQUIPMENT FOR WHICH LIABILITY IS CLAIMED.

8. Governing Law. This contract shall be governed by the laws of the State of Minnesota.

9. Arbitration. Any controversy or claim arising out of or relating to the limited warranty provided herein, or any alleged breach thereof, shall be settled exclusively by arbitration in accordance with the Rules of the American Arbitration Association, and judgment upon the award rendered by the arbitrator may be entered in any court having jurisdiction thereof. The arbitration shall be conducted in Minneapolis, MN, by one arbitrator selected by Messer and Purchaser, or, if they cannot agree, the President of the American Arbitration Association.

Rev. 7-20